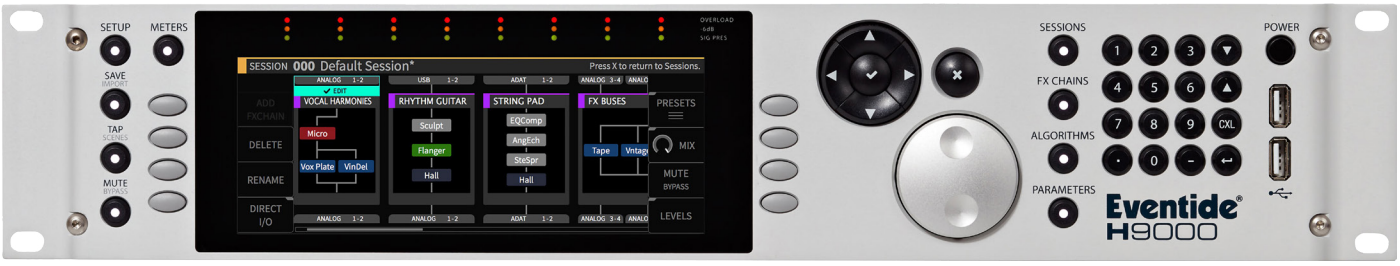

Instruction Manual

Zig Zag Delay
Zig Zag Delay 2

Godlike Productions

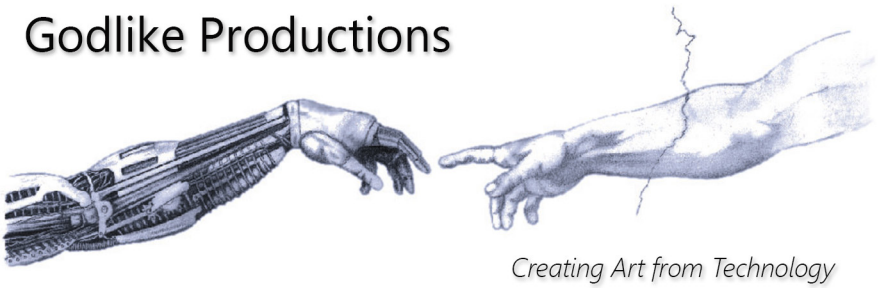

Revision 2.00

Godlike Productions Contact

All Customers:

Godlike Productions
PO Box 1520
Midland DC, WA, 6936, AUSTRALIA

Email: info@godlike.com.au

Caution

Ensure you have backed up all algorithms and other data of your H9000 prior to use of this product. You use these algorithms, chains, presets, sessions and/or other content entirely at your own risk and to all extents allowable under the law of Western Australia, Godlike Productions is not liable for loss of damage, direct, consequential or otherwise.

WWW https://godlike.com.au

support@godlike.com.au

https://www.facebook.com/GodlikeAustralia

www.twitter.com/GodlikeAust

https://www.youtube.com/GodlikeAu

Getting Started

- This manual is for a custom algorithm for the Eventide H9000 available at https://godlike.com.au/index.php?id=420. The Zig Zag Delay algorithm can be downloaded either as an algorithm that you can import from a USB drive (FAT32 formatted) onto your H9000 from the front panel, via Emote, or that can be uploaded via VSIG 3.3.3 or later.
- There will also be a copy of this manual in PDF format. If you lose your copy of the files, please contact us at https://godlike.com.au/index.php?id=contact and we will be happy to send you another copy, or re download the algorithm from the link above. This manual will be available within the zip file.

Installation and Activation

Method 1 - Install from USB

- Unzip the Algorithm and any presets. Copy Zig Zag Delay_3651628845.9ka, Zig Zag Delay 2_1908370540.9ka as well as the .9kp files to your USB drive and insert into your H9000.
- Long press the front panel Save/Import button; the Load Options screen will appear.
- Use the cursor up/down buttons or the wheel to navigate to Algorithms and press the Enter Key.
- Use the cursor up/down keys or wheel to select the Zig Zag Delay algorithm and then press the SELECT Key.
- If you do not wish to load presets, then you can use this algorithm as is. If you wish to use the presets, you will need to repeat this proceedure until this algorithm appears as algorithm 10156 and 10157, or you can install it and use our H9000 Preset Tool to renumber your Presets to the location where you have installed this algorithms. If you have installed to 10156, copies at lower numbers can be safely deleted using Emote (see below).
- After you have used the Preset Tool, open the .9kp files from your USB drive using the same procedure.

Method 2 - Install from Emote

- Unzip the Algorithm and any Presets.
- In Emote, select Algorithm -> Import
- Navigate to the unzipped Zig Zag Delay_3651628845.9ka file and press open. Repeat for Zig Zag Delay 2_1908370540.9ka
- If you do not wish to load presets, then you can use this algorithm as is. If you wish to use the presets, you will need to repeat this proceedure until this algorithm appears as algorithm 10156 and 10157, or install it, and then use our H9000 Preset Tool.
- You can safely delete lower numbered algorithms used to bump this to 10156 and 10157 by right clicking on the lower numbered algorithm and selecting Delete. Continue doing this until the only copy of Zig Zag Delay is the one loaded into slot 10156 and the only copy of Zig Zag Delay 2 is loaded into slot 10157..
- To load the presets select Preset and then Open. Navigate to the .9kp preset files and press Open.

Method 3 - Install using VSIG

- *Note that not all algorithms are available as VSIG files. If this algorithms is available as a VSIG it's file name will appear below.*
- File: not available for this algorithm
- Unzip the .sig2 file.
- Open this file within VSIG
- Ensure that VSIG is connected to your H9000
- Select the Upload Button

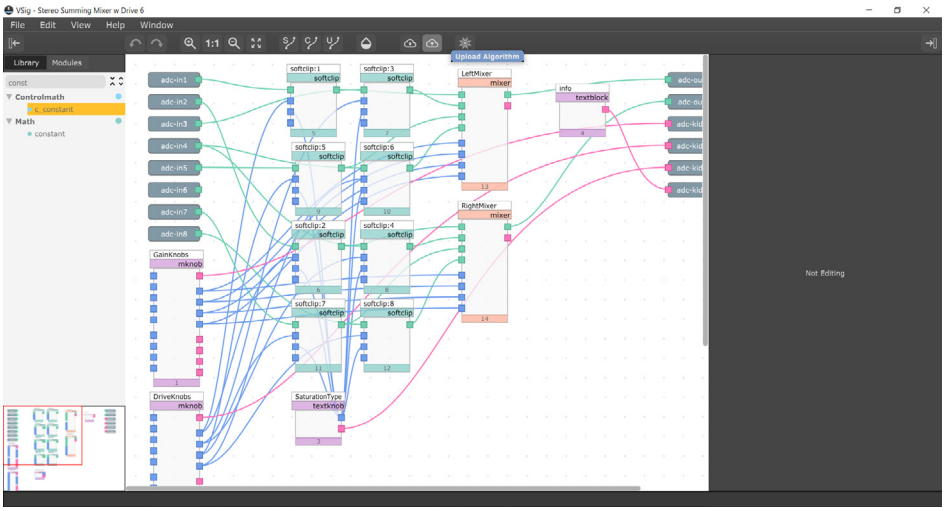

- Select Algorithm Location and type “10155” into the text box. Press Send.

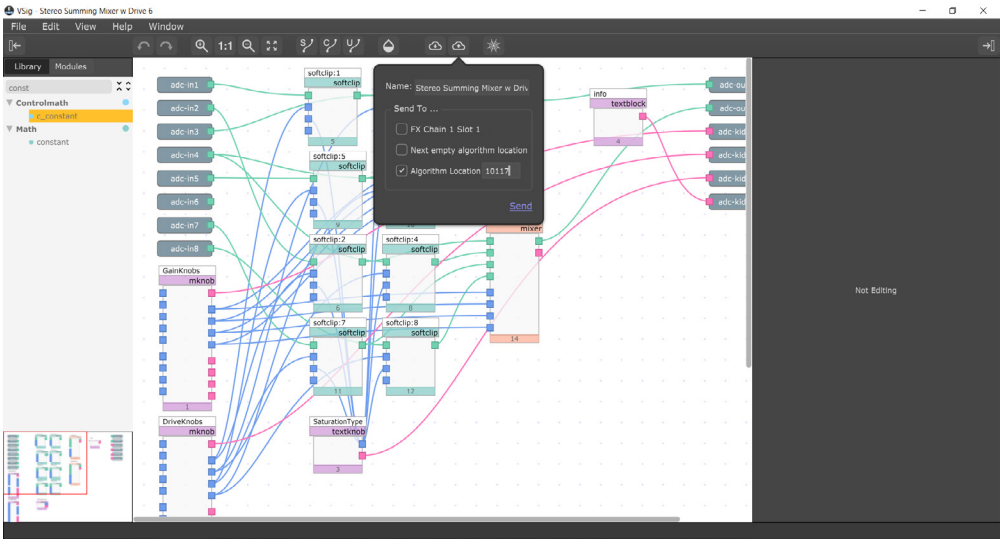

- If you prefer, you can load it to any location, and take note of the location and then use our H9000 Preset Tools.
- Presets cannot be loaded via VSIG. Install these either from Emote or from the front panel via USB.

Zig Zag Delay

The diagram below shows the signal flow of this algorithm.

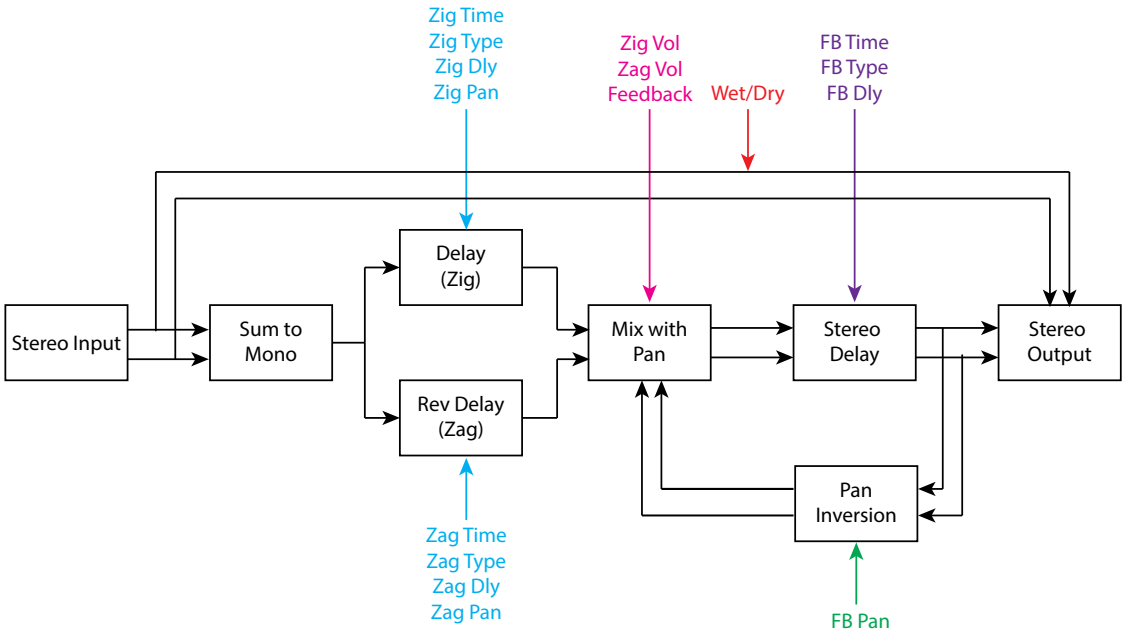

Parameters

Parameter	Description	Range
Zig Time Zag Time FB Time	The delay time in note lengths. Ensure that Tempo Mode is selected to get this algorithm working correctly.	4 Bar, 2 Bar, 1 Bar, 1/2 Note, 1/4 Note, 1/8 Note, 1/16 Note, 1/32 Note
Zig Type Zag Type FB Type	This modifies the Times above.	Normal, Dotted, Triplet
Zig Dly Zag Dly FB Dly	This is the manual delay time. These are overridden in Tempo Mode by the Time and Types. The maximum that this can ever be is 10,000 ms. In this algorithm, these cannot be set directly.	0 - 10,000 ms Default 300ms
Zig Pan Zag Pan	The pan position of the Zig and Zag delays. These positions are preserved into the feedback portion.	-100% to 100% Default: -100% (Zig) 100%)Zag)

Parameter	Description	Range
FB Pan	This is different to the Zig and Zag Pans. This is essentially a width parameter. Setting this to 100% preserves the Zig and Zag pans into the feedback delay. -100% inverts the pans on each feedback pass. 0% will centre the panning for the feedback delay.	-100% to 100% Default: 100%
Wet	At 0% wet, the dry stereo signal is passed straight to the output. At 100% no dry signal goes to the outputs, on the delayed signal.	0 - 100% Default: 50%
Zig Vol Zag Vol FB Vol	The volumes of the Zig and Zag delays and the Feedback volume into the stereo mixer. 0dB of FB will loop indefinately and will eventually build to very loud volumes. The scales on these knobs is tapered with better resolution near unity gain (0dB)	-100dB to 0dB

- This algorithm provides a forward and reverse delay that can be independently controlled and panned. This effect creates useful and unique pushing/pulling types of delay not available with other delay algorithms.
- For a demo of this algorithm visit https://youtu.be/VaiSAUNR7Xk

Zig Zag Delay 2

The diagram below shows the signal flow of this algorithm.

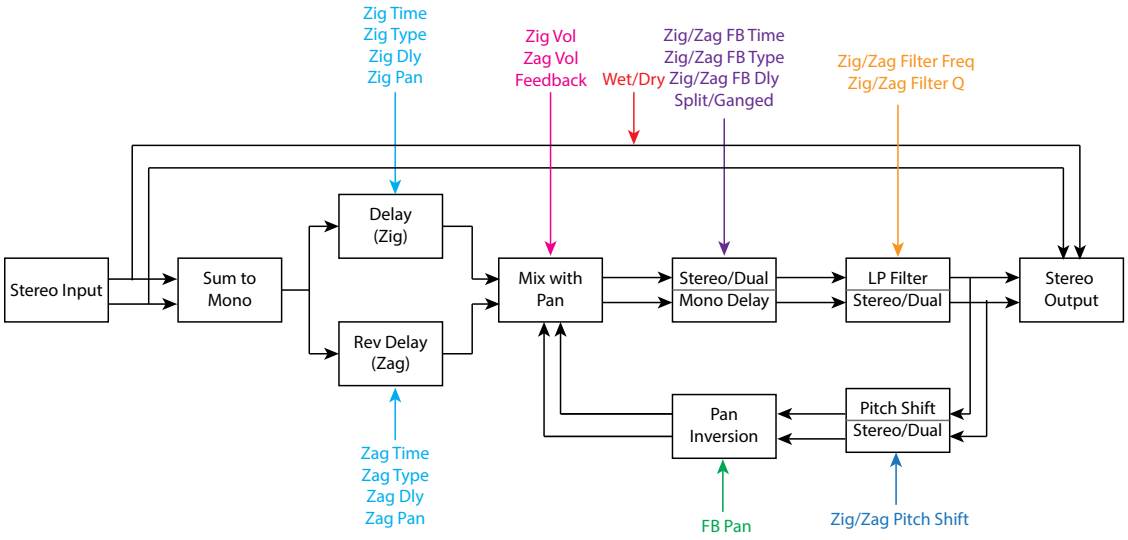

Parameters

Parameter	Description	Range
Zig Time Zag Time FB Time Zig FB Time Zag FB Time	The delay time in note lengths. Ensure that Tempo Mode is selected to get this algorithm working correctly.	4 Bar, 2 Bar, 1 Bar, 1/2 Note, 1/4 Note, 1/8 Note, 1/16 Note, 1/32 Note
Zig Type Zag Type FB Type Zig FB Type Zag FB Type	This modifies the Times above.	Normal, Dotted, Triplet
Zig Dly Zag Dly FB Dly Zig FB Dly Zag FB Dly	This is the manual delay time. These are overridden in Tempo Mode by the Time and Types. The maximum that this can ever be is 10,000 ms. In this algorithm these can be set directly. Selecting a time or type will overwrite after it has been set.	0 - 10,000 ms Default 300ms

Parameter	Description	Range
Zig Pan Zag Pan	The pan position of the Zig and Zag delays. These positions are preserved into the feedback portion.	-100% to 100% Default: -100% (Zig) 100%)Zag)
FB Pan	This is different to the Zig and Zag Pans. This is essentially a width parameter. Setting this to 100% preserves the Zig and Zag pans into the feedback delay. -100% inverts the pans on each feedback pass. 0% will centre the panning for the feedback delay.	-100% to 100% Default: 100%
Wet	At 0% wet, the dry stereo signal is passed straight to the output. At 100% no dry signal goes to the outputs, on the delayed signal.	0 - 100% Default: 50%
Zig Vol Zag Vol FB Vol	The volumes of the Zig and Zag delays and the Feedback volume into the stereo mixer. 0dB of FB will loop indefinately and will eventually build to very loud volumes. The scales on these knobs is tapered with better resolution near unity gain (0dB)	-100dB to 0dB Default: -3dB
Split/Ganged	When set to Ganged there will be only a single control for FB Time, FB Type, FB Delay, Filter Frequency, Filter Q, Pitch Shift, essentially treating the feedback loop as stereo. When set to split, all of these parameters can be set seperately for the feedback loop essentially making the feedback loop dual mono. If the FB Pan is set to 0 or above then there will be no mixing between the two loops and they will be seperate. Zig will be left and Zag will be right (though by setting Zig Pan and Zag Pan you can swap what is fed into the feedback loop). When FB Pan is less than 0, then each loop will swap sides allowing Ping Pong Effects.	Split, Ganged Default: Ganged
Filter Freq Zig Filter Freq Zag Filter Freq	This controls the cutoff frequency of the low pass filter on the feedback loop. Outputs are taken after the filter but before the pitch shift in the feedback loop, so even a single tap will have some high frequency attenuation.	0Hz - 20000Hz Default: 20000 Hz.
Filter Q Zig Filter Q Zag Filter Q	This is the steepness of the filter. Values above 1 will result in filter resonance. Be careful of high values of Q as it can result in nasty feedback loops if the Feedback is also set high.	0.5 - 10 Default: 1

Parameter	Description	Range
Pitch Shift Zig Pitch Shift Zag Pitch Shift	This optionally applies a pitch shift to the delay loop. As this is in the loop, repeating loops will have pitch spirals either up or down. To disable this, set to 0Cents	-1200 cents to 1200 cents. Default: 0 cents

- This algorithm provides a forward and reverse delay that can be independently controlled and panned with the feedback paths being able to be independently controlled. There is a filter and pitch shifter in the delay feedback loop. This effect creates useful and unique pushing/pulling types of delay not available with other delay algorithms, with the options for pitch spirals.
- Kill Dry has been implemented in this algorithm. It is supported in H9000 OS 2.1.12[138] and later.