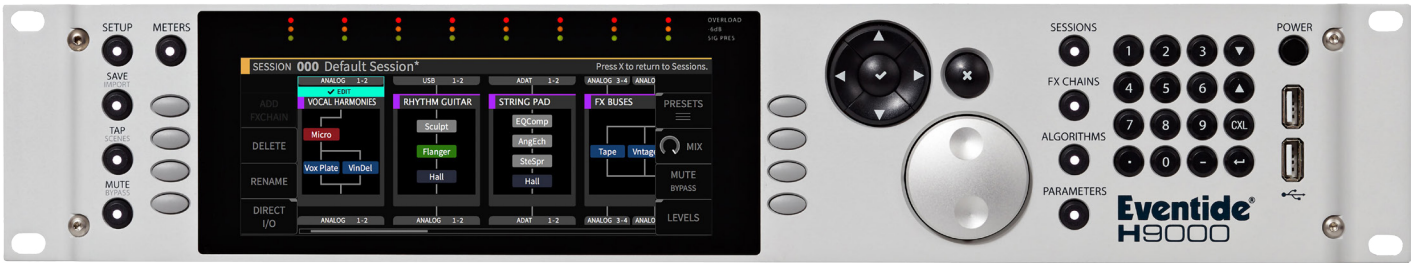

Instruction Manual

State Variable Filter w FB

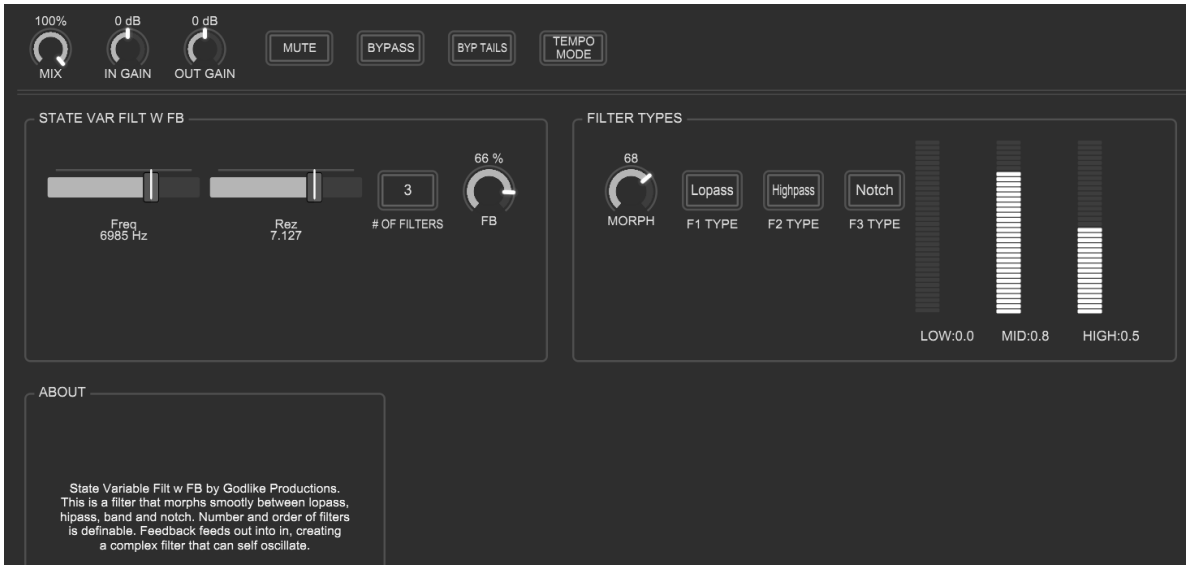

Godlike Productions

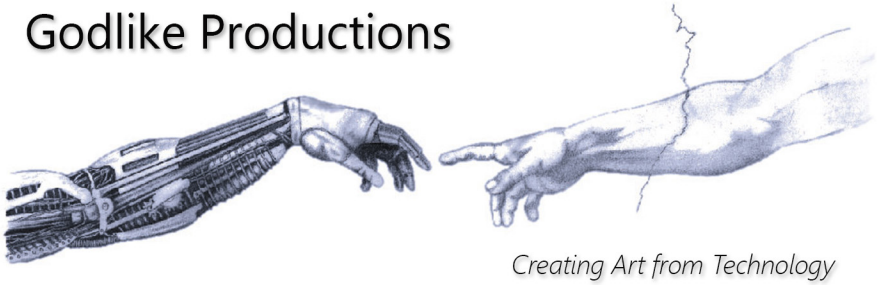

Creating Art from Technology

Revision 1.00

Godlike Productions Contact

All Customers:

Godlike Productions
PO Box 1520
Midland DC, WA, 6936, AUSTRALIA

Email: info@godlike.com.au

Caution

Ensure you have backed up all algorithms and other data of your H9000 prior to use of this product. You use these algorithms, chains, presets, sessions and/or other content entirely at your own risk and to all extents allowable under the law of Western Australia, Godlike Productions is not liable for loss of damage, direct, consequential or otherwise.

WWW https://godlike.com.au

support@godlike.com.au

https://www.facebook.com/GodlikeAustralia

www.twitter.com/GodlikeAust

https://www.youtube.com/GodlikeAu

Getting Started

This manual is for a custom algorithm for the Eventide H9000 available at https://godlike.com.au/index.php?id=420. The State Variable Filter w FB algorithm can be downloaded either as an algorithm that you can import from a USB drive (FAT32 formatted) onto your H9000 from the front panel, via Emote, or that can be uploaded via VSIG 3.3.3 or later.

There will also be a copy of this manual in PDF format. If you lose your copy of the files, please contact us at https://godlike.com.au/index.php?id=contact and we will be happy to send you another copy, or re download the algorithm from the link above. This manual will be available within the zip file.

Installation and Activation

Method 1 - Install from USB

- Unzip the Algorithm and any presets. Copy State Variable Filt w FB_1584443579.h9a as well as the .9kp files to your USB drive and insert into your H9000.
- Long press the front panel Save/Import button; the Load Options screen will appear.
- Use the cursor up/down buttons or the wheel to navigate to Algorithms and press the Enter Key.
- Use the cursor up/down keys or wheel to select the State Variable Filter w FB algorithm and then press the SELECT Key.
- If you do not wish to load presets, then you can use this algorithm as is. If you wish to use the presets, you will need to repeat this proceedure until this algorithm appears as algorithm 10136, or you can install it and use our H9000 Preset Tool to renumber your Presets to the location where you have installed this algorithms. If you have installed to 10136, copies at lower numbers can be safely deleted using Emote (see below).
- After you have used the Preset Tool, open the .9kp files from your USB drive using the same procedure.

Method 2 - Install from Emote

- Unzip the Algorithm and any Presets.
- In Emote, select Algorithm -> Import
- Navigate to the unzipped State Variable Filt w FB_1584443579.h9a file and press open.
- If you do not wish to load presets, then you can use this algorithm as is. If you wish to use the presets, you will need to repeat this proceedure until this algorithm appears as algorithm 10136, or install it, and then use our H9000 Preset Tool.
- You can safely delete lower numbered algorithms used to bump this to 10136 by right clicking on the lower numbered algorithm and selecting Delete. Continue doing this until the only copy of State Variable Filter w FB is the one loaded into slot 10136.
- To load the presets select Preset and then Open. Navigate to the .9kp preset files and press Open.

Method 3 - Install using VSIG

Note that not all algorithms are available as VSIG files. If this algorithms is available as a VSIG it's file name will appear below.

- File: not available for this algorithm
- Unzip the .sig2 file.
- Open this file within VSIG
- Ensure that VSIG is connected to your H9000
- Select the Upload Button

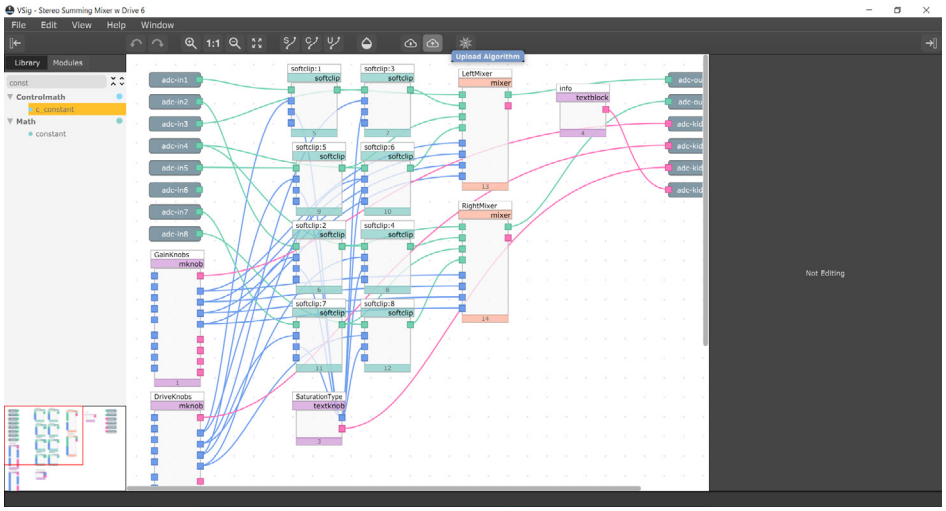

- Select Algorithm Location and type “10136” into the text box. Press Send.

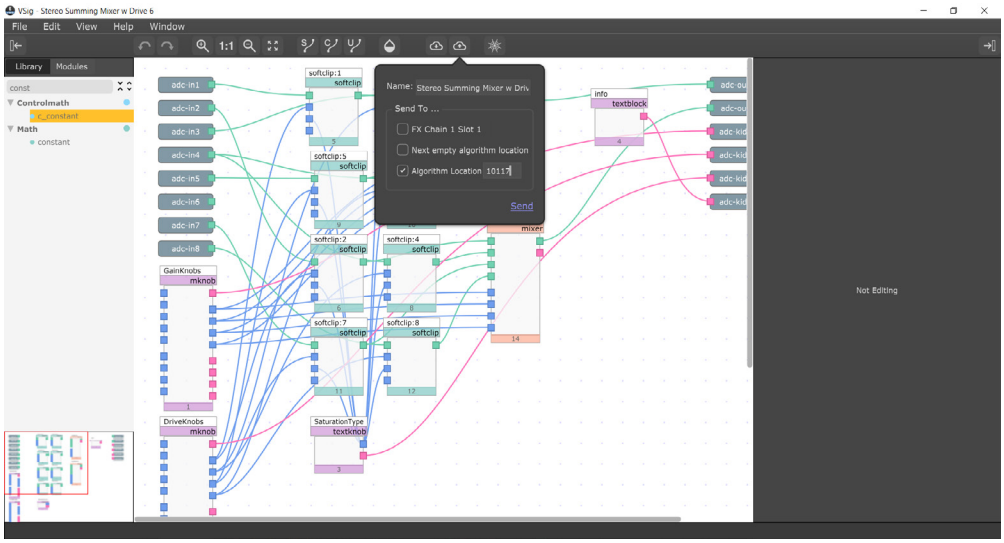

- If you prefer, you can load it to any location, and take note of the location and then use our H9000 Preset Tools.
- Presets cannot be loaded via VSIG. Install these either from Emote or from the front panel via USB.

Setting Things Up

The diagram below shows the signal flow of this algorithm.

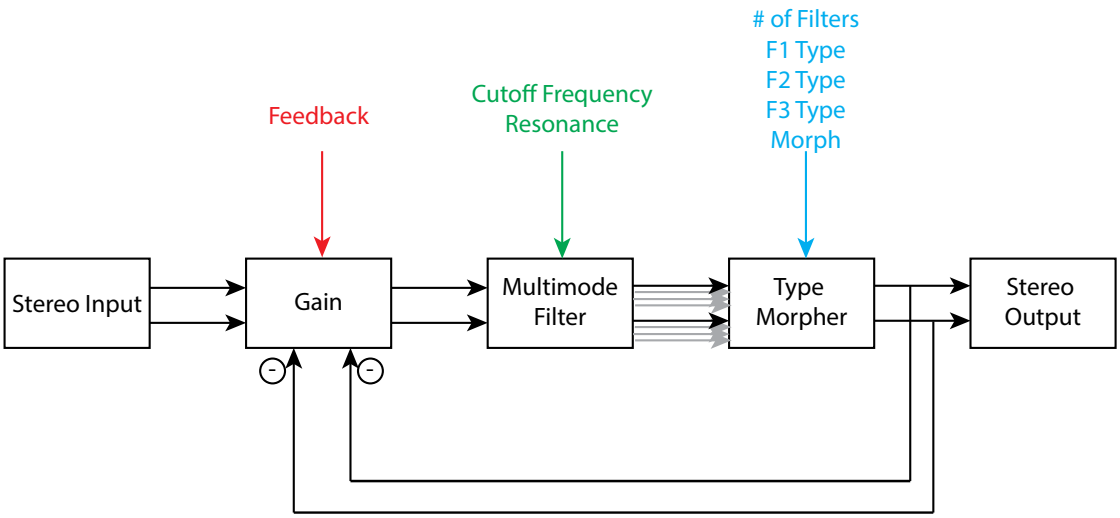

Parameters

Parameter	Description	Range
Freq	This determines the cutoff frequency, or centre frequency of the filter.	0 - 20,000Hz
Rez	This determines the resonance, or more accurately the Q of the frequency.. The filters bandwidth is Frequency/Q.. Higher levels are steeper, more resonant filters.	0 - 20
F1 Type, F2 Type, F3 Type	This selects between Lowpass, Bandpass, Highpass and Notch filter. The Freq and Rez will remain set when filters are changed.	Lowpass, Bandpass, Highpass, Notch
# of Filters	The number of filters to morph between	1, 2, 3
Morph	The proportion of each filter influencing the output filter.	0 - 100%

Parameter	Description	Range
Feedback	The amount of inverted output mixed back into input. Negative values inverts this (so it's uninverted in relation to the input, well as best as it can given the phase shifts of the filter) Above 50% feedback will decrease the input gain to avoid overloading the input.	-100% to 100%

This algorithm is a state variable filter with adjustable frequency and Q. Up to 3 different filter types can be selected and the morph knobs allows smooth morphing between the 3 shapes to create unique filters. It is stereo in and out and both channels are processed independently, for true stereo.. The feedback increases the complexity of the filter by feeding back a variable amount of output into the input of the filter.

For a demo of this algorithm visit https://youtu.be/EKKUtn1qnVQ